March 2019

An exploratory study on global risk-assessment determination for gas-fuelled inland waterways passenger ships

Vittorio BUCCI [a,1], Francesco MAURO [a] and Alberto MARINÒ [a]
[a] *University of Trieste, Department of Engineering and Architecture, Via Valerio 10, 34127, Trieste.*

Abstract. The increasing focus on navigation sustainability is forcing the utilisation of alternative power sources on board of inland vessels. The adoption of Liquefied Natural Gas is for sure a good option to reach the imposed targets on pollutant emission reductions. However, the issues related to the gas storage on board increase the hazards for people and environment in case of failures compared to a diesel fuelled vessel. In this sense, the analysis of risks is of primary importance. Traditionally, the failure and risks individuation is mainly based on qualitative consideration. In this study a procedure to quantify the risk is proposed and is tested on two inland waterway vessel having two different LNG propulsion systems installed on-board. The proposed method is aimed to give a quantitative comparison between two designs.

Keywords. Risk assessment, Ship safety, Inland Waterways Transportation, LNG propulsion, FMEA analysis

1. Introduction

Inland Waterway Transport (IWT) is nowadays known as an environmentally friendly mode of transport [1,2]. With the introduction of increasingly stringent emission regulations for road transport, the corresponding emissions in road transport decreased, which is not the case for the inland waterway, since most engines did not meet any emission standard. In terms of primary emissions such as nitrogen oxides and particulate, inland navigation stands to lose its comparative environmental advantage over road transport. Liquefied Natural Gas (LNG) may offer an effective solution [3,4], comparable with the adoption of hybrid-electric systems [5]. Innovative solution are of primary importance also for passenger transportation [6,7], usually operating in areas where environmental restrictions are severe [8,9,11,10]. The adoption of LNG leads to the rise of hazardous conditions that should be checked during the whole design process. The adoption of an LNG fuelled propulsion implies the adoption of completely different on-board systems compared to traditional ones. These systems have to be compliant with specific quality

[1] Corresponding Author: University of Trieste; E-mail: vbucci@units.it.

standards and dedicated regulations, that explicitly require the study of the risk assessment [12] not only for the on-board system itself but also for the entire bunkering procedure.

Through this work, the principal components of the LNG supply chain will be described and analysed together with the safety and security issues related to bunkering procedure and navigation. A new global risk assessment method is here described and applied to two LNG fuelled passenger vessel for inland and coastal navigation.

2. LNG supply chain

There are several issues to consider while planning a supply chain for LNG inland vessels. Some important aspects are: reliability, safety, supply security, capacity and flexibility. Additionally, also costs are probably the most important issue, however economic implications are not considered through the project. In fact, compared with traditional oil based ship fuels, the equipment and resources used in an LNG supply chain are more complex and more expensive, both in terms of CAPEX and OPEX, primarily due to the cryogenic temperatures of LNG.Therefore, the optimisation of all relevant aspects is important to keeping down the costs without compromising safety and security.

Since the work is focused on safety, an important difference between LNG as marine fuel and the traditional, oil-based ship fuels is that LNG has to be handled with care due to its perishable characteristics. The composition of LNG may change if it is handled incorrectly, making it less valuable or even useless as marine fuel. It may also generate negative environmental impact and pose significant risks to people when LNG vaporisation creates high pressure. Just like the bunkering of traditional oil fuels, LNG bunkering may be performed in different ways. At present, most LNG bunkering are made either from truck to ship or from small intermediate bunker terminals. Here, the following supply chains have been considered:

- *Shore/Pipeline to Ship (PTS)*: the bunkering is supplied by an intermediate LNG tank that can be alimented directly by pipelines or by trucks. Depending on the requirements and logistical options, the size of such tanks may vary from as small as a few tonnes to more than 50 000 tonnes. One limitation to this solution is that it is technically and operationally challenging to have long pipelines, which implies that the tank has to be located in the proximity of the berth where the bunkering operation shall be performed. The solution is most likely to be used for a port or berth with a stable and long-term demand for bunker delivery or used when a local LNG bunker demand coincides with other consumers, making it possible to co-use the necessary infrastructure.
- *Ship to Ship (STS)*: PTS chain has a clear limitations regarding capacity and flexibility. To avoid these, a more feasible option for LNG bunkering is by ship-to-ship operation, similar to how most fuel oil is supplied to ships today. The solution is flexible when it comes to both capacity and location, and an LNG bunker vessel or barge can be used to bunker most kinds of vessels. STS also has disadvantages, because the initial investment in a bunker vessel is significant, and it may be difficult to find alternative assignments for the bunker vessel when the LNG bunker demand is limited. If a barge is used, then it may either be self-propelled or un-propelled using one or several tugs when moving.

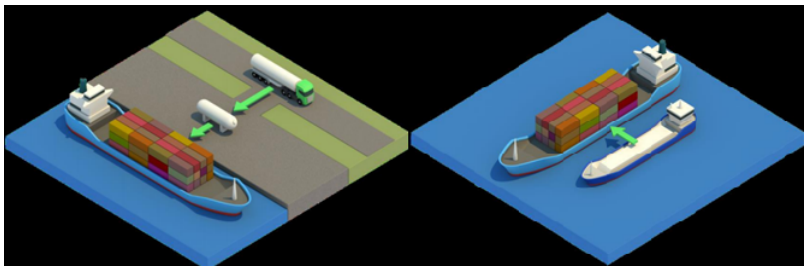

Figure 1. STP (*left*) and STS (*right*) LNG bunkering scheme

A schematic overview of the two solutions is presented in Figure 1.

3. Rule framework

The development of LNG as marine fuel still is in its early stage and the availability of international accepted and ratified rules and regulations for the design and operation of LNG fuelled vessels as well as LNG bunkering facilities is limited. This chapter primarily includes selected examples and descriptions of rules, regulations, guidelines and standards that are recommended for application and may facilitate development of both the LNG fuelled vessels as well as the supply chain of LNG as marine fuel. Due to the unclear regulatory situation it is important to understand that any project have to be developed in close cooperation between the different stakeholders and authorities and that a consensus of the selection and application of suitable rules and regulation has to be reached as early as possible in the process. In the risk assessment procedure it is assumed that each element of the LNG bunkering chain is designed and operated in line with relevant rules, regulations, guidelines or standards.

Based on the rules and regulations developed in Norway primarily by the Norwegian Maritime Authority and DNV during the early 2000s, IMO in June 2009 adopted Resolution MSC.285(86), also known as the interim IGF guidelines. The document includes design criteria as well as operational and educational rules and regulations for LNG fuelled vessels. The document is only published as guidelines and is put in force by the IMO member states and therefore does not constitute an official IMO code. Nevertheless, it is in principle applied on all LNG fuelled vessel in operation or under construction today.

The MSC adopted the International Code of Safety for Ships using Gases or other Low-flashpoint Fuels (IGF Code), along with amendments to make the Code mandatory under the International Convention for the Safety of Life at Sea (SOLAS). The IGF Code aims to minimize the risk to the ship, its crew and the environment, having regard to the nature of the fuels involved. The IGF Code contains mandatory provisions for the arrangement, installation, control and monitoring of machinery, equipment and systems using low-flashpoint fuels, focusing initially on LNG.

The regulations on bunkering and distribution facilities are strictly related to the national/regional rules and guidance. In Italy the regulations regarding the realisation and commissioning of onshore storage facilities are compliant with directive 2014/94/UE approved by the EU parliament on 12th October 2014. This was officially stated by Gazzetta Ufficiale on 13th January 2017 with the publication of the ‘Decreto legislativo

257'. Here besides the specific regulation framework on the bunkering facilities it is also described the application of the "Quadro strategico Nazionale" specifying in attachment III section c the application of LNG as novel fuel to be applied for inland navigation.

4. Global risk assessment procedure

In the present section the basics of a risk assessment procedure on a LNG fuelled vessel will be described. Since we are considering a global risk assessment, including bunkering operations and the onboard arrangement, both the aspects will be at first analysed as individual actions. Thereafter, a global index will be assessed considering the operative profile of the vessel. Means the frequency of the bunkering operations and the internal gas-fuel system layout.

Prior to define a risk index, it is necessary to evaluate the possible hazards and their occurrence and impact on the global safety. Risk analyses such as Failure Modes and Effects Analysis (FMEAs) provide a formalized approach to identify hazardous situations, address the gaps and interconnection variances, and improve safety, environmental performance and operational downtime. This analysis can be a powerful aid in identifying possible failures, during navigation or specific operations, which could potentially leave a vessel, an offshore installation or its crew and passengers in peril.

Prior to start an FMEA the following items should be clearly identified:

- System and subsystem identification
- Operational boundaries
- Failure criteria
- Depth of analysis
- Criticality ranking

It is accepted by classification societies, that owner/stakeholders provide their analyses according to their own experience and competences. In fact, FMEAs for the marine industry do not attempt to identify every possible fault of every component in the system, but will proceed to a level where additional analysis of failure modes from lower level components will not reveal additional effects on the system. In this report, since it is referring to an early design stage, the analysis will be carried out at a macroscopic level, being the relevant subsystem not completely designed at a detail level. To be more complete, FMEA can be extended with a Failure Modes Effects and Criticality Analysis (FMECA), including an additional criticality assessment. The criticality ranking explicitly and transparently brings to prominence the most critical issues and is extremely helpful for deciding the corrective actions. In the development, follow-up and implementation process of corrective actions, the criticality ranking helps to evaluate that the effort, time and resources are commensurate with the criticality of the item. An overview of the FMEA process is presented in Figure 2.

FMEA are usually performed on individual systems.To combine the different outcomes from standard subsystem evaluation, it is proposed to combine the single hazard analysis into a single risk evaluation number. For this purpose, it essential to rank the hazardous casualties in terms of occurrence and severity. In standard risk assessment processes, the risk is determined according to fixed risk ranges (high, medium or low). In such a way it is difficult to properly compare two different systems or rank different pos-

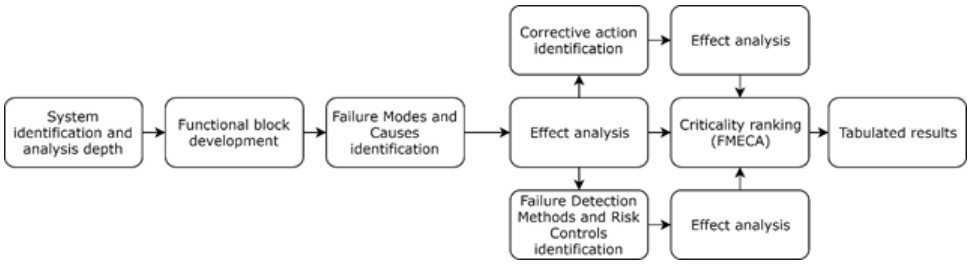

Figure 2. FMEA preparation process

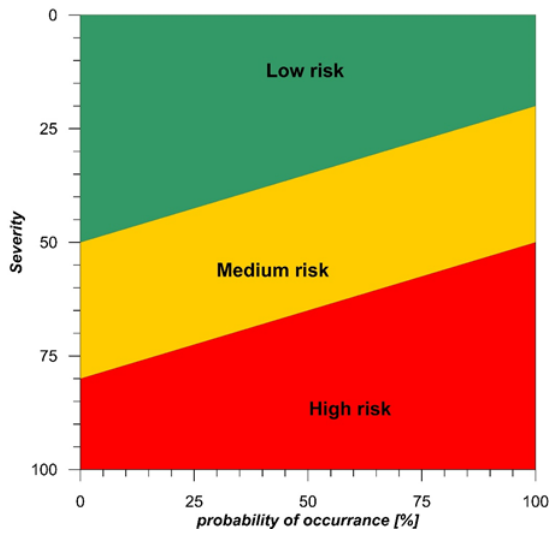

Figure 3. SCG approach example

sible solutions. In this sense, here it is proposed to use a continuous function to assess the risk level of each component, combining occurrence and severity. The basic formulation has the following form:

$$r_i = p_i s_i \tag{1}$$

Where p_i and s_i are the failure probability of occurrence and the consequences severity of a failure mode respectively. The severity is defined between 0 and 100, while probability of occurrence is of course between 0 and 1. With this kind of notation, the r_i is consequently ranged between 0 and 100. According to this approach, the risk level of minor occurrence failures has a low value, due to low probability of occurrence. By adopting only this kind of risk measure, the system subjected to the failure could be categorised as safe because has a low risk. However, since the severity is high, it has been decided to introduce also a qualitative evaluation of the risk level, introducing the thresholds between low, medium and high risk according to continuous functions. This flexible approach, called Severity Combined Gradient (SCG), establish three risk areas according to predefined linear functions that can be changed according to designer/operator experience and recommendations. The adopted convention for the present study is reported in Figure 3,

Table 1. Probability of occurrence for FMEA analysis

p	0.05	0.15	0.35	0.75	0.95
Denomination	Not credible	Unlikely	Possible	More than average	Likely
Description	Never heard of such an incident in the industry	Incident requiring multiple failures to occur	Incident might occur without the due care	Incident is likely to occur without the due care	Incident occurs
Occurrence interval	>10 years	>5 years	>1 year	>3 months	>1 month

Table 2. Severity evaluation

s	0	25	50	75	100
Personnel	no injury	single injury	one or more severe injuries	single fatality	multiple fatalities
Community	no hazard	noise	one or more minor injuries	one or more severe injuries	fatality
Environmental	no violation	permitted violations	minor on-site impact	serious on-site impact	serious off-site impact
Legal	no laws broken	laws could be broken	contraventions	notice of violation	business activities suspended
Reputation	no loss of reputation	unwanted publicity	media attention	local impact on clients reputation	international impact on client reputation
Facility	no damage	minimal equipment damage	some equipment or structural damage	major damage to installation	major or total destruction

having the following algebraic equations:

$$s = \begin{cases} 80 - 0.3p & \text{high/medium risk threshold} \\ 50 - 0.3p & \text{medium/low risk threshold} \end{cases} \tag{2}$$

Stated the occurrence probability of a failure mode, the thresholds can be evaluated and due to the failure severity the qualitative risk level is identified. For each subsystem a global risk can be evaluated multiplying the means of occurrence probability and severity taking into account all the failure modes of the subsystem. The same approach can be adopted to evaluate a global risk index. For both the levels also the qualitative risk level can be evaluated with the previously exposed approach. With the proposed technique not only two failure mode can be easily compared, but also entire subsystems and systems. The probability of occurrence of each failure mode is estimated according to the Table 1, whereas the severity is assessed according to Table 2. The severity is evaluated through

Table 3. Pure IWT and combined IWT/seagoing vessel characteristics

Characteristic	Value		Characteristic	Value	
	IWT	seagoing		IWT	seagoing
Length overall	95.53 m	111.80 m	Design speed	10 kn	14 kn
Length between perp.	91.23 m	100.50 m	Autonomy	3000 km	3000 km
Breadth	11.40 m	11.40 m	LNG storage	2·30 m^3	85m^3
Draft	1.70 m	2.60 m	Main engines	2·550 kW	2·650 kW
Air Draft	8.60 m	8.60 m	Gensets	4·200 kW	3·776 kW
Dead-weight	1750 t	2075 t	Passengers	76	80
Displacement	1890 t	2220 t	Crew	45	50

a corrected weighted average [13]. The corrected average approach allows to take into account the crucial aspects better than a standard weighted average, which reads:

$$s_a = \sum_{i=1}^{n} w_i s_i \tag{3}$$

where s_a is the overall severity, whilst s_i and w_i denote the actual value of the severity and the weight (importance) of all the elements in Table 2, respectively. These elements are distinguished in two categories: primary or secondary. Primary elements contribute to the overall severity through a weighted average; in addition, if at least one of the primary elements tends to the maximum severity (100), the risk index of the upper level tends to the maximum too. Secondary elements contribute to the overall severity only through a weighted average. For primary elements, a correction to the value of the upper level risk index is applied; this correction takes into account how near to the maximum value is the worst primary lower level criterion. If this value reaches the minimum (0), also the risk index will reach the minimum value. The correction reads:

$$s^* = s_a + \frac{(s_{p_M} - s_a)\, s_{p_M}}{100} \tag{4}$$

where s^* is the corrected overall severity and s_{p_M} is the maximum severity related to primary elements. In the present study, personnel, community and environment are assumed to be primary elements. With this kind of assumption it is possible to make an estimation of the risk level of two different designs.

5. Application

The procedure explained in the previous section is here applied on two gas fuelled passenger vessels for inland and coastal navigation both equipped with cycloidal propulsors. The pure IWT vessel has a mechanic propulsion system, while the combined IWT/seagoing vessel has a diesel-electric propulsion. In Table 3 the main characteristics of the two vessels are described, while a general description of the gas supply and electric system is given in Figures 4 and 5 for the pure IWT and the combined IWT/seagoing vessel respectively.

For the pure IWT ship, due to the technologies adopted for the vessel apparatus, the

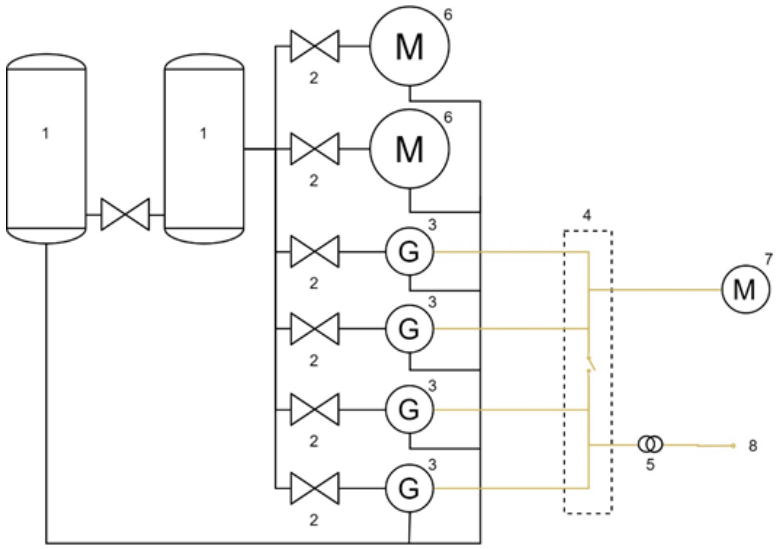

Figure 4. Gas (*black*) and electric (*yellow*) system concept scheme for IWT vessel: 1) Containment system 2) Gas valve unit 3) Genset 4) Main switchboards 5) HV/LV Transformer 6) Propulsion dual fuel engine 7) Bow thruster motor 8) low voltage users

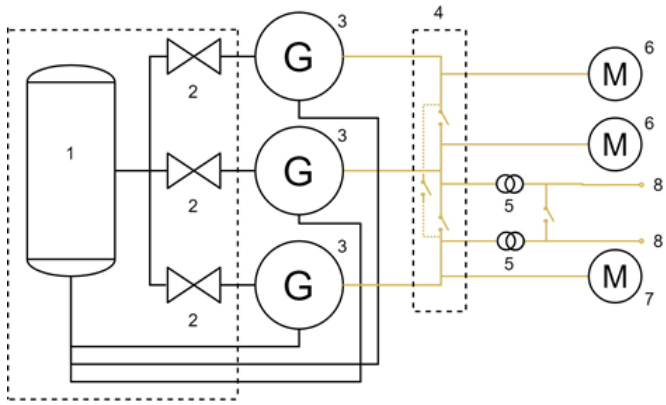

Figure 5. Gas (*black*) and electric (*yellow*) system concept scheme for combined IWT/seagoing vessel: 1) Containment system 2) Gas valve unit 3) Genset 4) Main switchboard 5) HV/LV Transformers 6) PEM 7) Bow thruster motor 8) Low voltage users

gas fuel system is not integrated in a single external unit, the containment system (composed by LNG tank, vaporiser and reliquefaction unit) are in a single module installed on an open deck, while gas valve units are installed in a dedicated gas-tight compartment under the main deck. Having the vessel a pure mechanic propulsion system, the generators are considered as individual independent units responsible of the complete electric generation on board, being the prime movers not connected to any electric generation device. For the combined IWT/seagoing vessel the gas fuel system is integrated in a single external unit, the containment system (composed by LNG tank, vaporiser and reliquefaction unit) and the gas valve units are enclosed in a single module installed on

Table 4. Global risk assessment for pure IWT and combined IWT/seagoing vessel

		IWT vessel			IWT/seagoing vessel		
Operation	w_i	s_i	p_i (%)	r_i	s_i	p_i (%)	r_i
Navigation (N)	0.82	51.86	11.42	5.92	46.06	7.72	3.56
Harbour (H)	0.15	41.54	11.74	4.88	42.23	9.03	3.81
Bunkering A (B_A)	0.02	44.61	10.27	4.58	45.47	7.95	3.61
Bunkering B (B_B)	0.01	43.39	10.08	4.37	44.12	7.74	3.42
GLOBAL	1.00	49.92	11..41	3.60	45.45	7.92	3.60

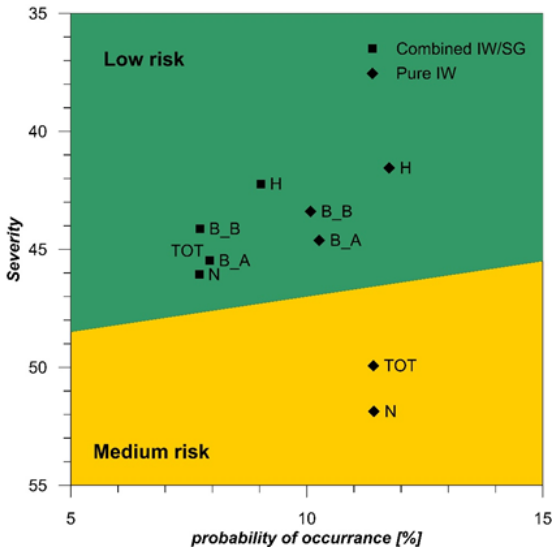

Figure 6. Risk diagram according to SCG approach for both vessels. N: Navigation; H: Harbour; B_A: Bunkering case A; B_B: Bunkering case B; TOT: life-cycle risk level

an open deck. The vessel a diesel electric propulsion system, thus the gas supply to each generator is ensured a dedicated pipe system and the main switchboard has a redundant architecture to assure the functionality of high voltage electric distribution system.

The hypothesis on the base of the risk study is restricted to the operation in the North Adriatic area and river Po, considering two possible bunkering options in Trieste (CASE A) and Ravenna (CASE B). In case A, STS system is investigated as chain supply option, while for B a PTS system has been assumed. Cases A and B have been analysed for both ships. An individual risk assessment analysis has been carried out on each subsystem of the two vessels with respect to the gas supply system and power generation. For brevity in the exposition, here only the global estimation of the risk is reported, according to the relative time spent in each condition (Navigation, Harbour, Bunkering A and Bunkering B) spent in an hypothetical ship life-cycle.

The results of the global risk assessment are reported in Table 4, highlighting that the pure IWT vessel has an higher risk level compared to the combined IWT/seagoing one. According to the adopted procedure, the IWT vessel has a global medium risk level, while the other one results low. The data can be also visualised in graphical form as represented in Figure 6.

6. Conclusions

The present study presented the application of an enhanced methodology to perform a risk analysis on two LNG fuelled passenger vessels. The risk analysis connected to the propulsion system of both vessels has been developed in multiple operational conditions (navigation, harbour and two bunkering types). For each of them a global risk index and then a life-cycle risk index has been assessed. The pure IWT vessel presents a higher risk in terms of both occurrence probability and severity of consequences. Nevertheless, for IWT vessel, slightly less severe consequences have been spotted in harbour and during bunkering conditions. On the contrary, the probability of occurrence of accidents is always higher if compared with the combined IWT/Seagoing vessel. For the latter vessel, the simpler and more redundant propulsion system results in an increased safety level on the overall life-cycle and especially in navigation condition, which, in such a case, is the most probable and then most influential operative scenario. The proposed method is able to highlight possible differences between designs and will be a starting point for the study of more complete and detailed scenarios for risk determination.

Acknowledgement

This work was supported by "ACTIVE – Air Cavity Technology for Inland Vessels" research program, funded by the Regione Autonoma Friuli-Venezia-Giulia with POR-FESR 2014-2020, asse 1.3b.

References

[1] J. Rochàcs, G. Simongàti, The role of inland waterway navigation in sustainable transport system, *Transport* **22**(3) (2007), 148-153.

[2] A. Bernardini, L. Cok, C. Baroni, C. Legittimo, et.al., An innovative concept for inland waterway vessels, *Proceedings of NAV 2018*, Trieste, 2018.

[3] V. Bucci, A. Marinò, D. Bosich, G. Sulligoi, Inland waterway gas fuelled: an innovative proposal of a hybrid ship for the European Network, *Proceedings of IEEE, ESARS 2015*, Aachen, 2015.

[4] V. Bucci, A. Marinò, D. Bosich, G. Sulligoi, Inland waterway gas-fuelled vessels: CASM-based electrification of a pushboat for the European Network, *IEEE Transactions on transportation Electrification* **2**(4) (2016), 607-617.

[5] F. Mauro, G. Sorrenti, L. Bonfiglio, V. Bucci, Integrated design of an eco-friendly luxury super-yacht, *Proceedings of the 2018 SNAME Maritime Convention, SMC 2018*, Providence, 2018.

[6] V. Bucci, F. Mauro, A. Marinò, D. Bosich, G. Sulligoi, An innovative hybrid-electric small passenger craft for sustainable mobility in the Venice lagoon, *International Symposium SPEEDAM*, 2016.

[7] V. Bucci, F. Mauro, A. Marinò, D. Bosich, A. Vicenzutti, G. Sulligoi, Integrated design of a hybrid-electric power system for coastal navigation multipurpose crafts, *Proceedings of 12th EVER*, 2017.

[8] V. Bucci, A. Marinò, Hybrid electric propulsion for an eco-friendly inland waterway passenger catamaran, *1st INT-NAM 2011*, Istanbul, 2011.

[9] F. Mauro, U. la Monaca, C. Nasso, V. Bucci, An hybrid-electric solution for station-keeping and propulsion of a small coastal research vessel, *International Symposium SPEEDAM*, 2018.

[10] C. Nasso, U. la Monaca, S. Bertagna, L. Braidotti, F. Mauro, G. Trincas, A. Marinò and V. Bucci, Integrated design of an eco-friendly wooden passenger craft for inland navigation, *International Shipbuilding Progress* 66(1):35-55, 2019.

[11] V. Bucci, A.Marinò, A. Businaro, The new hybrid small passenger vessel for the Venice Lagoon, *Proceedings of NAV 2015*, Lecco, 2015.

[12] IMCA, M 178 FMEA Management Guide, *IMCA technical report*, 2005.

[13] G. Trincas, L. Braidotti, L. De Francesco, Risk-based system to control safety level of flooded passenger ships, *Brodogradnja* 68(1):31-60, 2017.